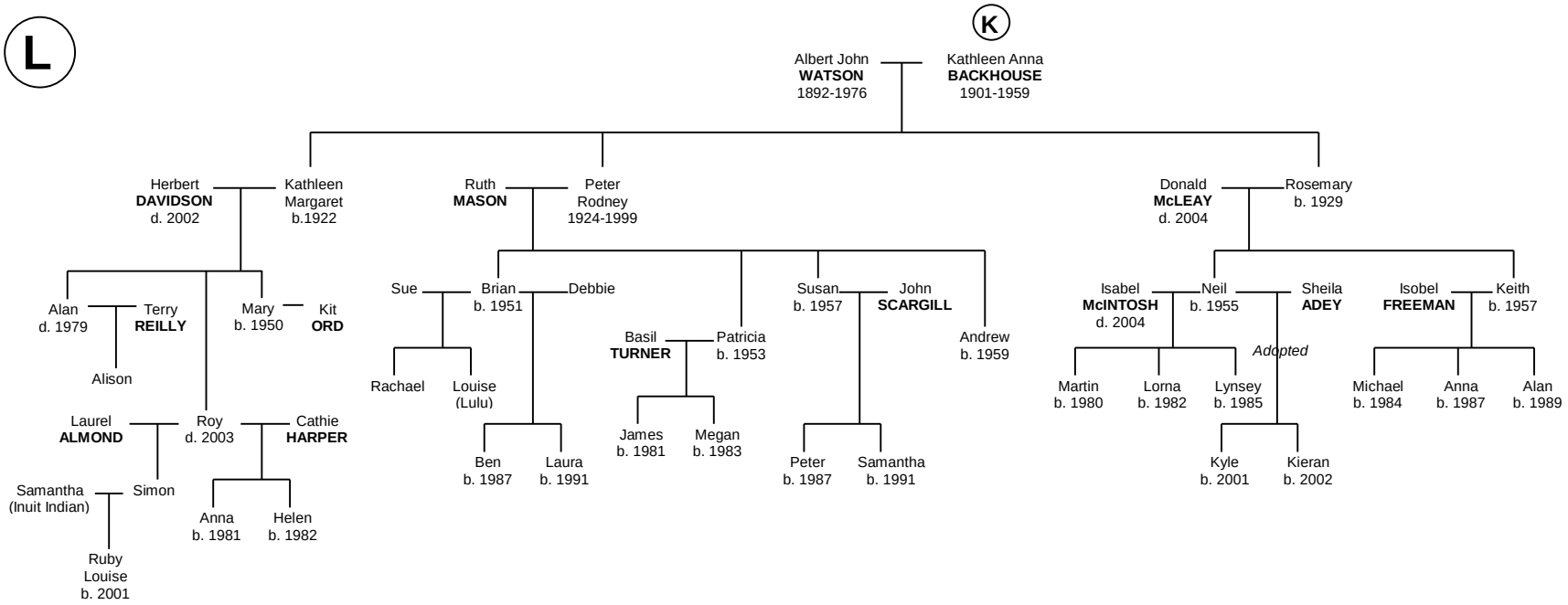
L
K
Albert John WATSON 1892-1976
Kathleen Anna BACKHOUSE 1901-1959
Herbert DAVIDSON d. 2002
Kathleen Margaret b.1922
Ruth MASON
Peter Rodney 1924-1999
Donald McLEAY d. 2004
Rosemary b. 1929
Alan d. 1979
Terry REILLY
Alison
Mary b. 1950
Kit ORD
Laurel ALMOND
Roy d. 2003
Cathie HARPER
Samantha (Inuit Indian)
Simon
Ruby Louise b. 2001
Anna b. 1981
Helen b. 1982
Sue
Brian b. 1951
Debbie
Rachael
Louise (Lulu)
Ben b. 1987
Laura b. 1991
Basil TURNER
Patricia b. 1953
James b. 1981
Megan b. 1983
Susan b. 1957
John SCARGILL
Peter b. 1987
Samantha b. 1991
Andrew b. 1959
Isabel McINTOSH d. 2004
Neil b. 1955
Sheila ADEY
Adopted
Martin b. 1980
Lorna b. 1982
Lynsey b. 1985
Kyle b. 2001
Kieran b. 2002
Isobel FREEMAN
Keith b. 1957
Michael b. 1984
Anna b. 1987
Alan b. 1989